MIETZSCH

GmbH Lufttechnik Dresden

USER INFORMATION

DROPLET ELIMINATORS

SERIES TRA 125

Droplet eliminators
Series TRA

Use in ventilation, air conditioning, and process technology

High chemical resistance by optional manufacture
of PVC or PPs (PE, PVDF, conductive plastics)

Manufacturing series with 21 standard sizes and three design types each for rates of volumetric flow of up to 100,000 m³/h

Elimination degree of 99 % for droplets exceeding the limit droplet size

Elimination of droplets above 4 µm approximately

Connection of other components according to standard by adapters and transition ducts as accessories

In combination with spray modules also suitable for elimination of dusty media

eliminator profil

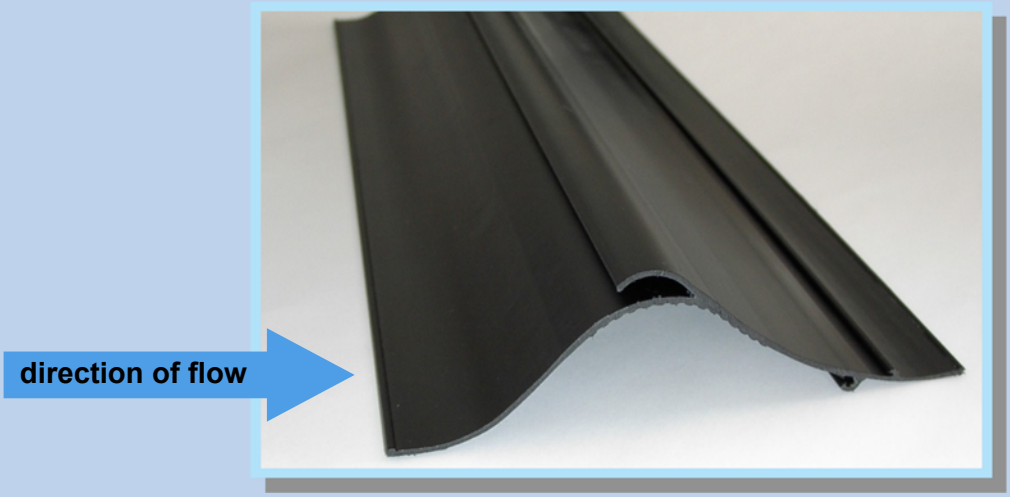

demister

Data specified herein are subject to alteration without prior notice.
They will not be valid without written confirmation by the manufacturers.

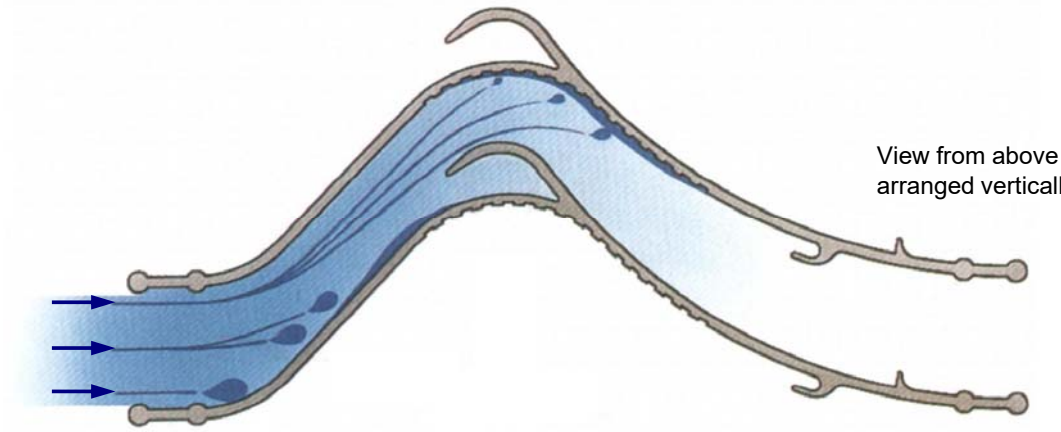

View from above to laminas arranged vertically

APPLICATION

The droplet eliminators of plastic material are used for the separation of liquid droplets in ventilation, air conditioning and process technologies, especially in combination with air scrubbers and gas cleaning plants and for resource recovery as well. The use of .high-quality plastics leads to high corrosion resistance and makes them suitable for aggressive gases and vapours in particular.
The specific design of eliminator profiles leads to elimination rates of more than 99 % for droplets exceeding the limit droplet size. Pressure losses are low in spite of high flow velocities. Droplets from spray nozzles (droplet size 10 … 100 µm) as well as smallest droplets (below 10 µm) can be eliminated with good efficiency.
Demands on equipment and energy are relatively low so that the eliminators are a convenient solution for separation of dangerous substances at favourable cost.

In cases of heavily dust-laden, sticking and crystallizing media we recommend the use of rinsing modules for moistening of the eliminator profiles to prevent sticking of solid matter and clogging of profiles.

Droplet eliminators with preceding rinsing modules can also be used as gas washers or scrubbers for **plain** gas cleaning processes (short-path washers). In this case a washing liquid is sprayed into the medium across the entire flow area. Dangerous substances will then pass by absorption from the gas to the liquid which has to be aftertreated in a following process.

TECHNICAL DESCRIPTION

The sinusoidal bending of eliminator profiles leads to a distinct change of gas flow direction. Droplets carried over by the gas stream cannot follow this direction change unless they are very small. Due to inertia, droplets above a certain size (limit droplet size) impinge on the profile wall, form a liquid film which will then run down into a container.
Drain-off of the separated liquid is supported by special phase separator chambers and guide grooves on the profiles.

Droplets below the limit droplet size are separated to a certain extent only. This fraction elimination degree can be increased for such droplet shares by another row of eliminator profiles arranged behind the first one.
Another improvement, for smallest droplets in particular, is possible by a demister arranged in between. It consists of a fine knitted plastic mesh to hold the small droplets. These form bigger droplets which run downward or are eliminated in the following profile. It is thus possible to separate even droplets of about 5 µm by more than 95 % from the gas stream.
The limit droplet size can be reduced by an increase of free stream velocity. This, however, is accompanied by higher pressure losses. The design allows flow velocities of up to 10 m/s. The most favourable working range amounts to 3 … 8 m/s. 5 m/s should not be exceeded if the eliminators are equipped with demisters.

DESIGN

The plastic droplet eliminator consists of a square duct with dimensions of a x b x L in which the eliminator elements are arranged. Integration into the line system is possible by different duct connection components (frames, adapters or pipe fittings).

The eliminators (profiles inserted vertically, demister mesh) are inserted either as single elements or as cassettes.
Eliminator elements for cassettes are arranged in a frame and put as a complete unit into the duct. This is advantageous for maintenance, cleaning and repair in particular.

The eliminators are accessible through a cleaning opening on top and can thus be cleaned or removed easily. The opening can also be on the side if the eliminator elements are of cassette design.

The separated liquid is collected in a collector tray arranged underneath and led out through outlet fittings. Suitable components (siphons, collecting containers) have to ensure that air cannot be conveyed through the water outlet pipe.
The collector tray has been designed as a base to place the complete droplet eliminator on even ground. The axis height is free to be chosen so that it can be adapted to the axis height of a fan arranged immediately behind the eliminator. The outlet fittings are arranged laterally.

The bottom of the collector tray can optionally be made as a baseplate. This allows arrangement on wall consoles or a suitable steel substructure. Outlet fittings are led out downward.

Materials:	housings and connecting components	PVC, PPs (on request: PE, PVDF, conductive plastics)
	eliminator profiles	PP glass fibre-reinforced, PVC
	knitted plastic mesh	PP

CONDITIONS OF USE

temperature range	PVC: 0 … 40 °C PPs: 0 … 70 °C
permissible vacuum	1,000 Pa (use in overpressure range after consultation with manufacturers only)

Droplet eliminators should not be used outdoor because they may freeze up.

The applied materials have good **chemical resistance** to many substances. However, it should be considered that even plastics are attacked by certain chemicals.
Relevant conditions are as follows: chemical composition and concentration of media
temperature and exposure time
mechanical loading and residual stress by processing
Many applications have led to good experience with "standard materials" such as PVC or PPs.
For selection of suitable materials, please specify the purpose of use of the fan and kind of medium conveyed in your request or order.
The medium can be slightly **dust-laden** but higher wear must be expected in such cases.

TYPE SERIES

For meeting the demands arising from the majority of possible applications, the series consists of 21 standard sizes. Every size has three types differing by the number of eliminator rows:

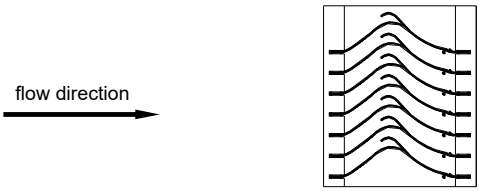

TRA 125/1

One row of eliminator profiles.

Use for elimination of droplets from spray nozzles mainly with large droplets.

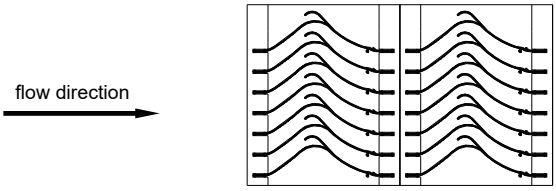

TRA 125/2

Two rows of eliminator profiles.
The second row of profiles increases the fraction elimination degree for droplets which are smaller than the limit droplet size

Use for a larger share of smaller droplets

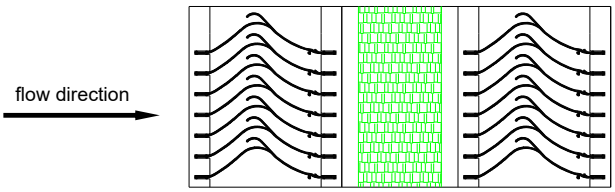

TRA 125/3

Two rows of eliminator profiles with a demister between them.
Smallest droplets are eliminated in the demister by impingement. They form bigger droplets which run downward or are eliminated in the following profile.

Use if droplets of <10 µm down to mists and aerosols (range of 1 µm) have to be eliminated.

DIMENSIONING GRAPH

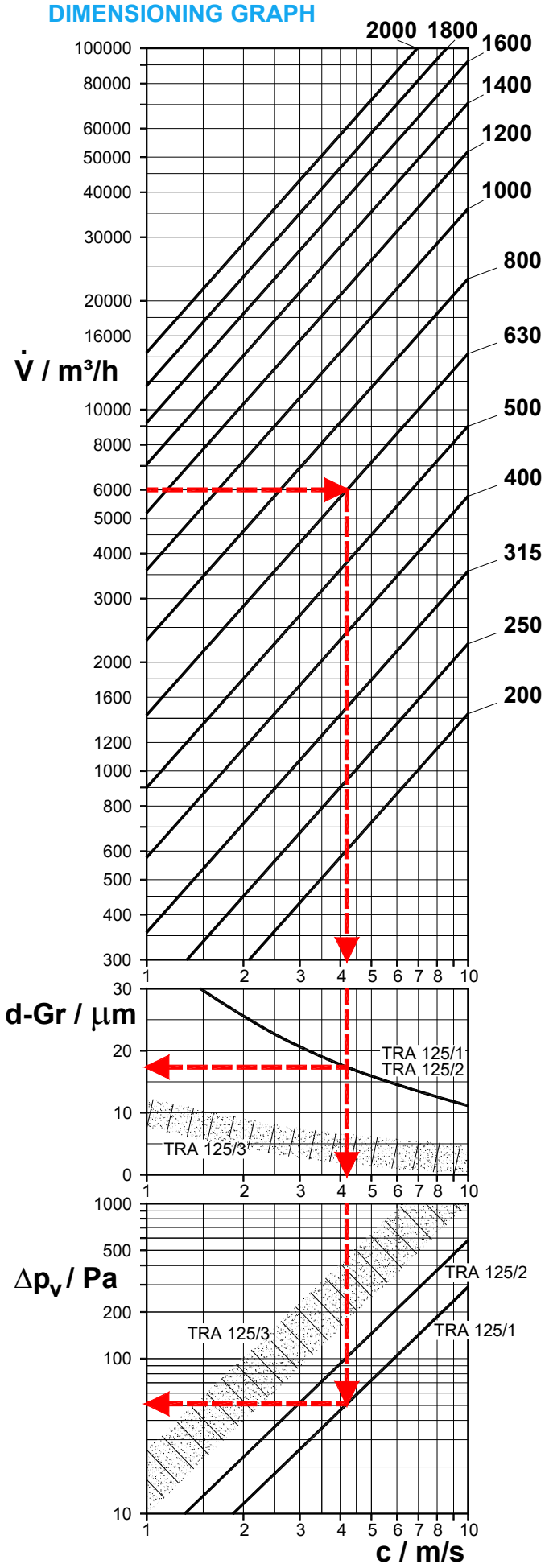

Nominal size
(width = height)

Selection criteria

Droplet eliminators are selected according to

- volumetric flow
- limit droplet size
- pressure loss
- space required
- price

Information on size of particles to be eliminated is often very uncertain.
Especially in cases of aggressive gases and vapours we recommend to select an eliminator type with two or three eliminator rows.

Dimensioning example

volumetric flow: 6.000 m³/h

dimensions chosen: 630 mm x 630 mm

Flow velocity can be read from graph above:
applies to all types → c = 4.2 m/s

most favourable working range3 … 8 m/s

Limit droplet size read from middle graph:

TRA 125/1 and TRA 125/2 → d_{lim} = 17 µm

TRA 125/3 (with demister) → d_{lim} = 1 … 7 µm

All droplets whose size exceeds this limit are eliminated, those below are eliminated to a certain extent only (fraction elimination degree).

Pressure loss read from lower graph:

TRA 125/1 → Δpl = 50 Pa
TRA 125/2 → Δpl = 100 Pa

TRA 125/3 (with demister) → Δpl = 200 … 450 Pa

Criteria demanded will usually be fulfilled with eliminators of different dimensions. Consequently, several variants should be dimensioned and compared with one another in all cases.

DIMENSIONS

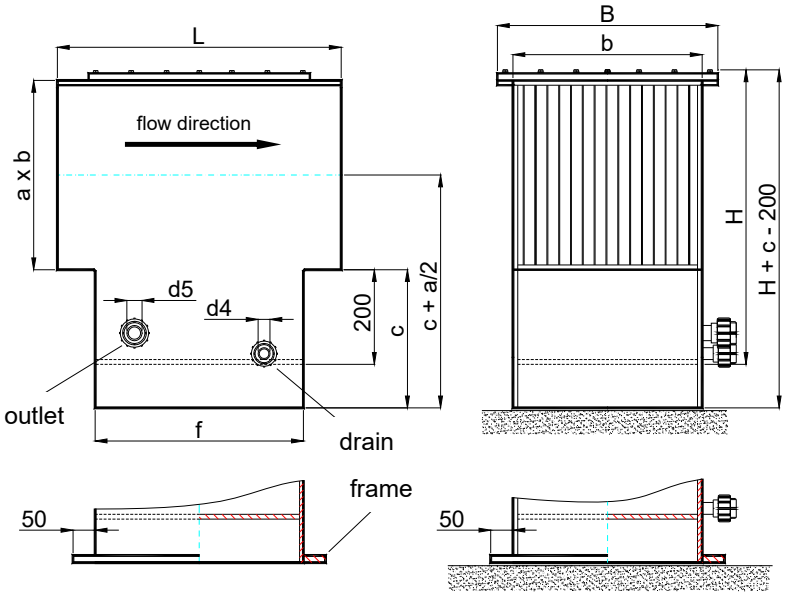

Design BE

The bottom of the collector tray is above the level of fitting. The extended base allows adaptation to the height of ventilation lines.

Dimension c is free to be chosen in the range of 220 … 500 mm.
The overall assembly height in such cases is (H + c - 200) mm.

Assemble on even floor and secure against slipping.

Outlet sockets are arranged laterally.

Optional: surrounding frame for fastening to floor.

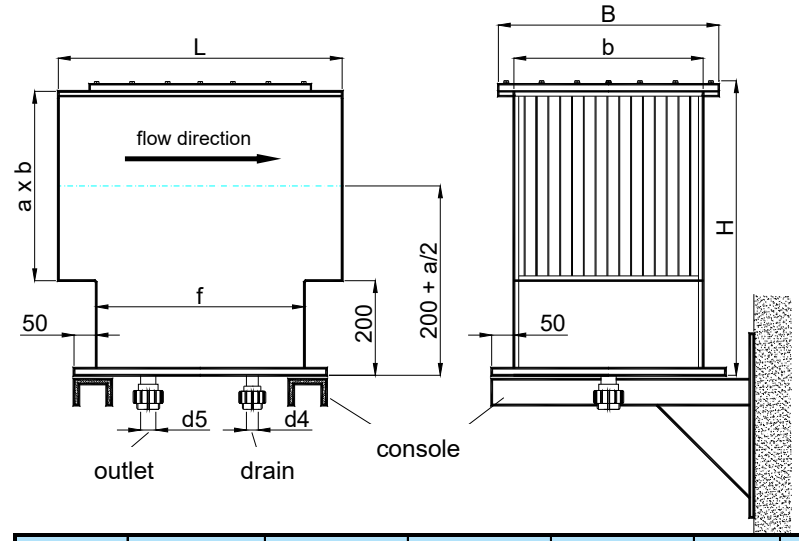

Design KE

The bottom of the collector tray has been made as a baseplate.

Arrangement on wall consoles or steel substructure.

Outlet sockets lead downward.

size	flow cross section	TRA / 1 1-row		TRA / 2 2-rows		TRA / 3 3-rows		width	height	screwing fixture drain	screwing fixture outlet 1)
	a , b	L	f	L	f	L	f	B	H	d4	d5
TRA 160	160		226		440		550	230	385		
TRA 200	200		226		440		550	270	425		
TRA 250	250		226		440		550	320	475	20	40
TRA 315	315		226		440		550	385	540		
TRA 355	355		226		440		550	425	580		
TRA 400	400		226		440		550	470	625		
TRA 450	450		226		440		550	520	675	25	50
TRA 500	500		226		440		554	570	725		
TRA 560	560		230		444		554	630	785		
TRA 630	630	380	230	600	444	700	554	700	855		
TRA 710	710		230		444		554	780	935		
TRA 800	800		230		444		554	870	1025		
TRA 900	900		234		448		558	970	1125		
TRA 1000	1000		234		448		558	1070	1225		
TRA 1100	1100		234		448		558	1170	1325	32	63
TRA 1200	1200		234		448		558	1270	1425		
TRA 1300	1300		234		448		558	1370	1525		
TRA 1400	1400		234		448		558	1470	1625		
TRA 1600	1600		234		448		558	1670	1825		
TRA 1800	1800		234		448		558	1870	2025		
TRA 2000	2000		234		448		558	2070	2225		

1)
Value d5 for outlet applies to standard designs only.
It may be larger in case of preset spray modules.

DIMENSIONS

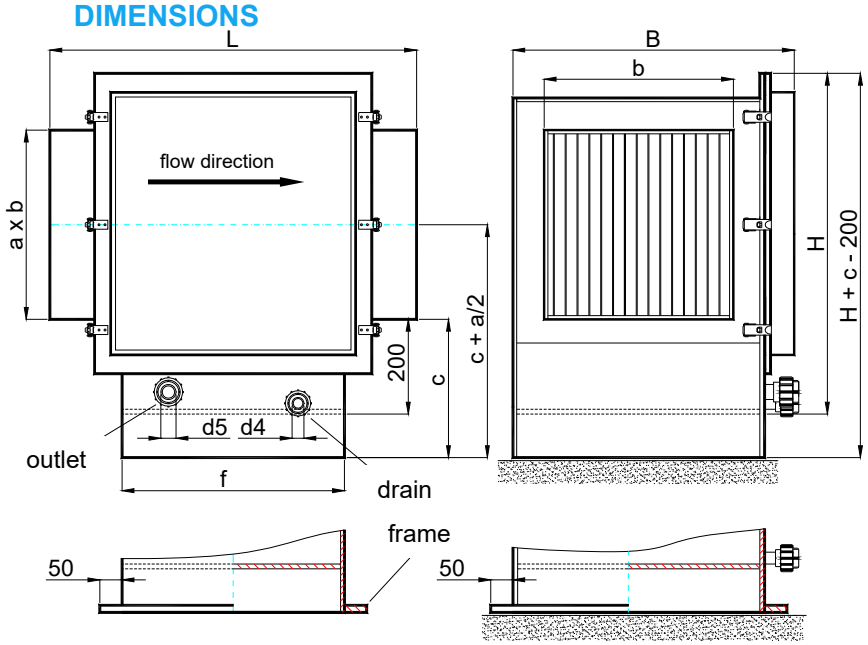

Design BK

The eliminators can be pulled out laterally as complete cassettes.

The bottom of the collector tray is above the level of fitting. The base is extended and allows adaptation to the height of ventilation lines.

Dimension c is free to be chosen in the range of 220 … 500 mm.
The overall assembly height in such cases is (H + c - 200) mm.

Assemble on even floor and secure against slipping.

Outlet sockets are arranged laterally.

Optional: surrounding frame for fastening to floor.

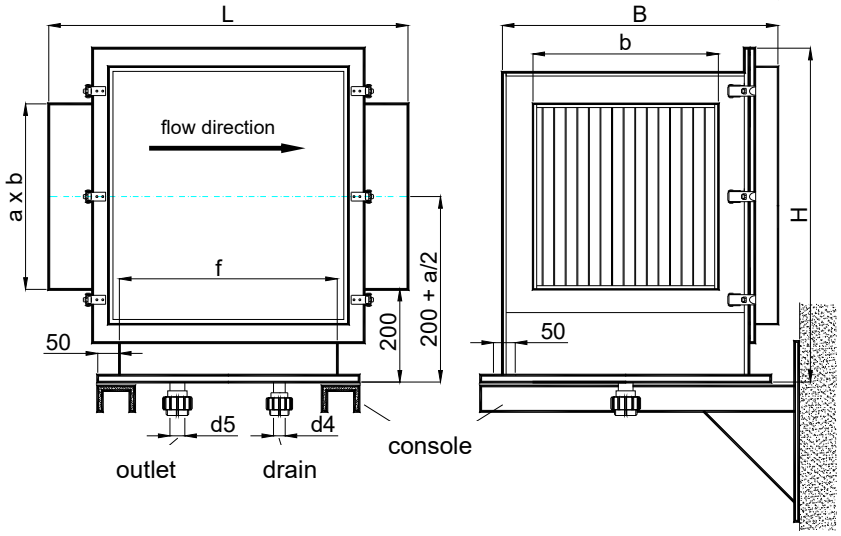

Design KK

The eliminators can be pulled out laterally as complete cassettes.

The bottom of the collector tray is a baseplate.

Arrangement on wall consoles or steel substructure.

Outlet sockets lead downward.

size	flow cross section	TRA / 1 1-row		TRA / 2 2-rows		TRA / 3 3-rows		width	height	screwing fixture drain	screwing fixture outlet 1)
	a , b	L	f	L	f	L	f	B	H	d4	d5
TRA 160	160		245		470		695	386	478		
TRA 200	200		245		470		695	426	518		
TRA 250	250		245		470		695	476	568	20	40
TRA 315	315		245		470		695	541	633		
TRA 355	355		245		470		695	581	673		
TRA 400	400		245		470		695	626	718		
TRA 450	450		245		470		695	676	768	25	50
TRA 500	500		245		470		695	726	818		
TRA 560	560		245		470		695	786	878		
TRA 630	630	550	245	775	470	1000	695	856	948		
TRA 710	710		245		470		695	936	1028		
TRA 800	800		245		470		695	1026	1118		
TRA 900	900		249		474		699	1126	1218		
TRA 1000	1000		249		474		699	1226	1318		
TRA 1100	1100		249		474		699	1326	1418	32	63
TRA 1200	1200		249		474		699	1426	1518		
TRA 1300	1300		249		474		699	1526	1618		
TRA 1400	1400		249		474		699	1626	1718		
TRA 1600	1600		249		474		699	1826	1918		
TRA 1800	1800		249		474		699	2026	2118		
TRA 2000	2000		249		474		699	2226	2318		

1)
Value d5 for outlet applies to standard designs only.
It may be larger in case of preset spray modules.

ASSEMBLY / MAINTENANCE

Unless agreed otherwise, the droplet eliminator has to be arranged for horizontal flow and with vertical eliminator profiles. The direction of flow is marked by an arrow on the housing.
Flow against the body has to be as uniform as possible. The flow distance without obstacles should be at least the double side length (a or b). Sharp deflections and delays right preceding the eliminator must urgently be avoided because otherwise higher pressure losses and less efficiency have to be expected.

An outlet line with sufficient dimensions has to ensure free outlet of the eliminated liquid at any time (compare outlet diameter d5). Aftertreatment of liquids is necessary according to the type of substances dissolved,
Suitable measures have to be taken to prevent admixed air streams in the outlet line (e.g. siphons, collecting vessels or submerged pipes). Submergence has to be chosen according to the vacuum on the gas outlet side of the droplet eliminator.
A valve to be arranged in the drain line must be closed during operation.

The equipment has to be easily accessible to allow convenient cleaning or, if needed, exchange of eliminator elements.

Cleaning intervals have to be specified by the user in consideration of operating conditions. The profiles have to be cleaned by water jet of no more than 60 °C with a detergent added in cases of need from above after the cover on top of the droplet eliminator has been removed. Heavily soiled profiles have to be replaced. The valve of the drain line has to be opened for this purpose.

APPLICATION EXAMPLE: SHORT-PATH WASHER

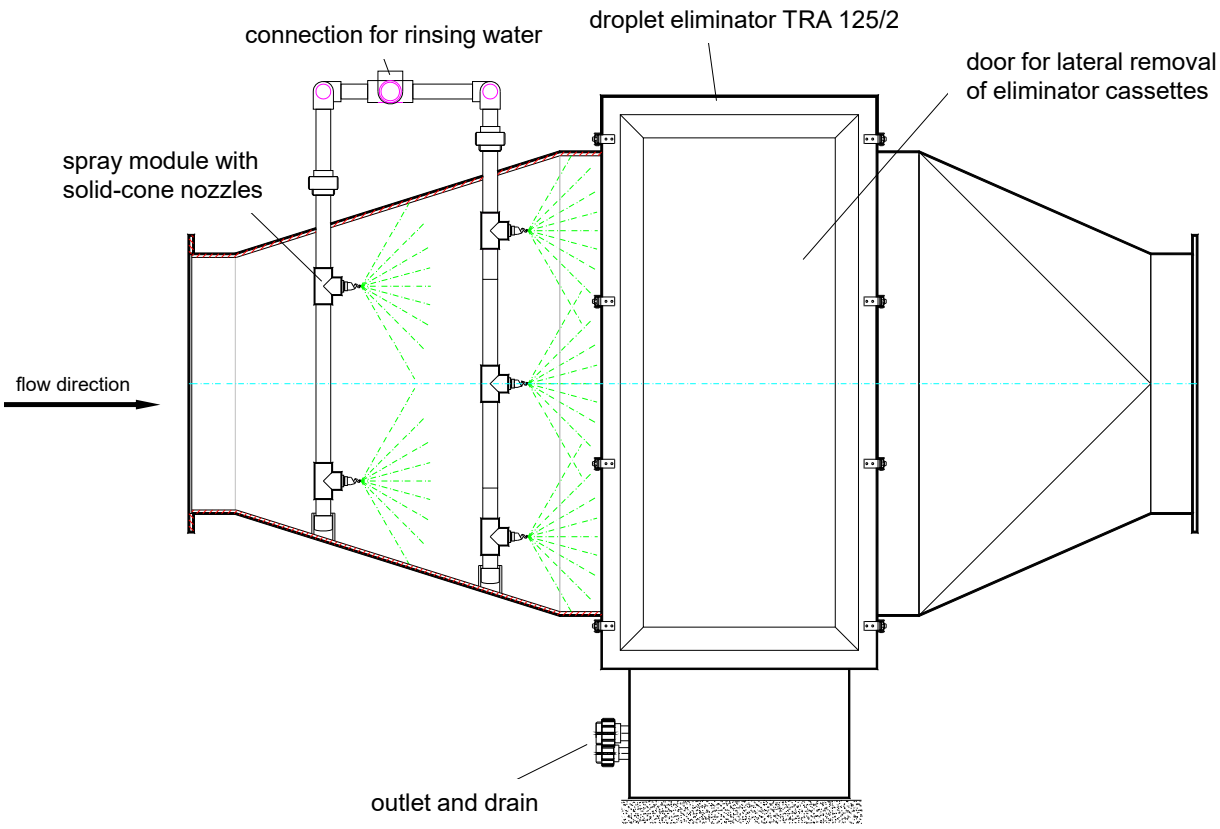

The figure shows the combination of a droplet eliminator of type TRA 125/2 with a rinsing module for the separation of heavily dust-laden waste air. The fine dust binds to water droplets sprayed by the solid-cone nozzles and is thus removed from the gas.
Other applications of short-path washers:

- Removal of aerosols from the gas stream (binding to sprayed liquid leading to better separation)
- Material recovery from acid bath exhausts
- Elimination of droplets from exhaust gas washing plants

PIPE ADAPTERS

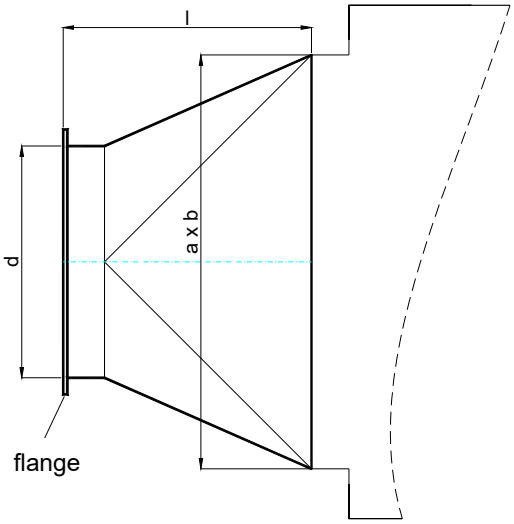

Pipe adapters are welded directly to the basic body of the droplet eliminator. Flanges are made according to MIETZSCH standard MWS 53030 or to customers' special wishes.
Dimensions listed are recommended standard values which should not be fallen below for the intake side at least.

size	flow cross section a , b	pipe adapter l	connection diameter d (recommendet) 1- or 2-rows	3-rows
TRA 160	160	250	140	110
TRA 200	200	250	180	125
TRA 250	250	250	200	160
TRA 315	315	300	280	200
TRA 355	355	300	315	225
TRA 400	400	350	355	250
TRA 450	450	350	400	280
TRA 500	500	400	450	315
TRA 560	560	400	500	355
TRA 630	630	450	560	400
TRA 710	710	450	630	450
TRA 800	800	500	710	500
TRA 900	900	500	800	560
TRA 1000	1000	550	900	630
TRA 1100	1100	550	1000	710
TRA 1200	1200	550	1100	800
TRA 1300	1300	650		
TRA 1400	1400	650		
TRA 1600	1600	750		
TRA 1800	1800	750		
TRA 2000	2000	850		

SIPHON

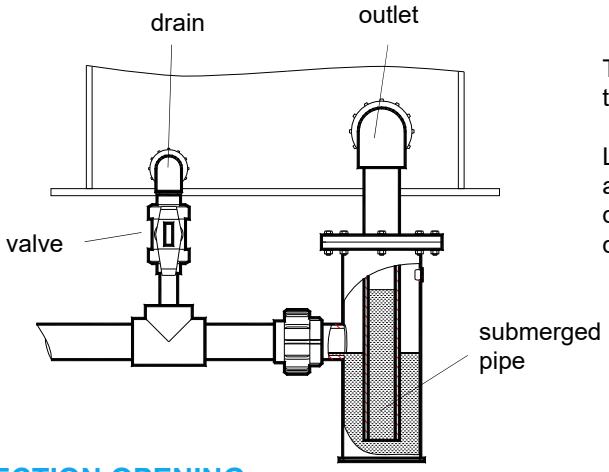

The siphon is used to prevent admixed air streams through the exhaust air line.

Length of the submerged pipe depends on the amount of vacuum on the air outlet side. All other dimensions are adapted to the corresponding droplet eliminator.

INSPECTION OPENING

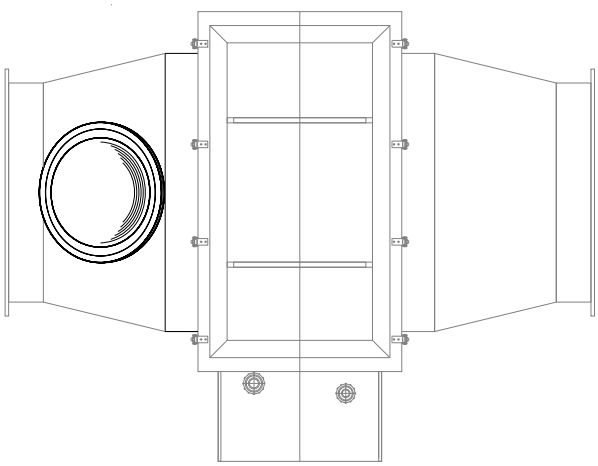

Inspection openings are arranged in suitable positions in the pipe adapter.
The glass-clear plastic window allows inspection of the spray function.

The window is opened for visual inspection of eliminators, for cleaning and exchange of spray nozzles.

no.	quantity	specification		individual price EUR	Total price EUR

Droplet eliminator of plastic material

Mietzsch Lufttechnik - Baureihe TRA

Object:

Corrosion-resistant droplet eliminator

Design:	TRA 125/1	1 row of interchangeable eliminator profiles of PP
	TRA 125/2	2 rows of interchangeable eliminator profiles of PP
	TRA 125/3	2 rows of interchangeable eliminator profiles of PP and with demister arranged in between

Kind of arrangement: on even floor **B** / on console **K**
Eliminator installation: individual **E** / in cassettes **K**

Cleaning opening: top / lateral

Entrance connection: smooth / frame
Outlet connection: smooth / frame

Optional housing material: PVC or PPs

TRA 125 / _ - _ _ _ _ x _ _ _ _ - _ _ - _ _ _ _

Eliminator type
Width b
Height a
Arrangement
Eliminator insertion
Material

Volumetric flow	:	_____	m^3/h
Width b	:	_____	mm
Height a	:	_____	mm
Length L	:	_____	mm
Number of eliminator elements	:	_____	
Pressure loss	:	_____	Pa
Limit droplet size	:	_____	µm
Temperature of medium conveyed	:	_____	°C
Weight	:	_____	kg

Purpose of use of medium conveyed:

Special accessories and special equipment:

- Adapter fittings and adapter ducts
- Special demister designs
- Spray module, integrated or as additional assembly
- Siphon
- Special cleaning and inspection openings

Droplet eliminator
with spray module

Eliminator cassette

MIETZSCH

Short-path washing plant
Droplet eliminator TRA 125/2
Spray module with pump and receiving vessel
Radial fan VRE

Spray nozzle
preceding row of
eliminator profiles

Our program of products and services

Roof fans
of all-plastic design, horizontally or vertically blowing out with many assembly accessories

Radial fans
of thermoplastic material and FRP,
direct and belt driven
up to about 150 000 m³/h and 6 500 Pa

Special fans
duct fans, built-in devices, mobile radial fans, Venturi injectors

Explosion-proof fans
according to ATEX for zone 1 and zone 2

AIR technology systems and components
pipes, ducts, fittings, flaps, gas-tight shutoff flaps, exhaust air hoods, deflector hoods, suction hoods and many more of plastic material, complete air technology systems for industry and craft, air cleaning plants, laboratory and process exhaust systems

Central ventilation systems
in housing construction, special-purpose fans, exhaust elements, controlling and regulating devices

Noise protection
rectangular and cylindrical sound attenuators, silencing casings in corrosion-proof design

Exhaust gas cleaning
droplet eliminators and moisteners, gas scrubbers for separation of gaseous dangerous substances, dust filter

Heat exchangers
for heat recovery from moist and aggressive exhaust air

Tanks
of thermoplastic material for liquids endangering water, according to water resources regulations

Controlling and regulating elements and systems
switches, motor protection devices, speed controllers, frequency inverter, fan controls, flow supervision

Special designs
devices, linings, special components etc.
of plastic material

Engineering performances
planning, calculation, and design, ventilation measurement on standardized test stands, low and high temperature test in company-own climatic test chambers

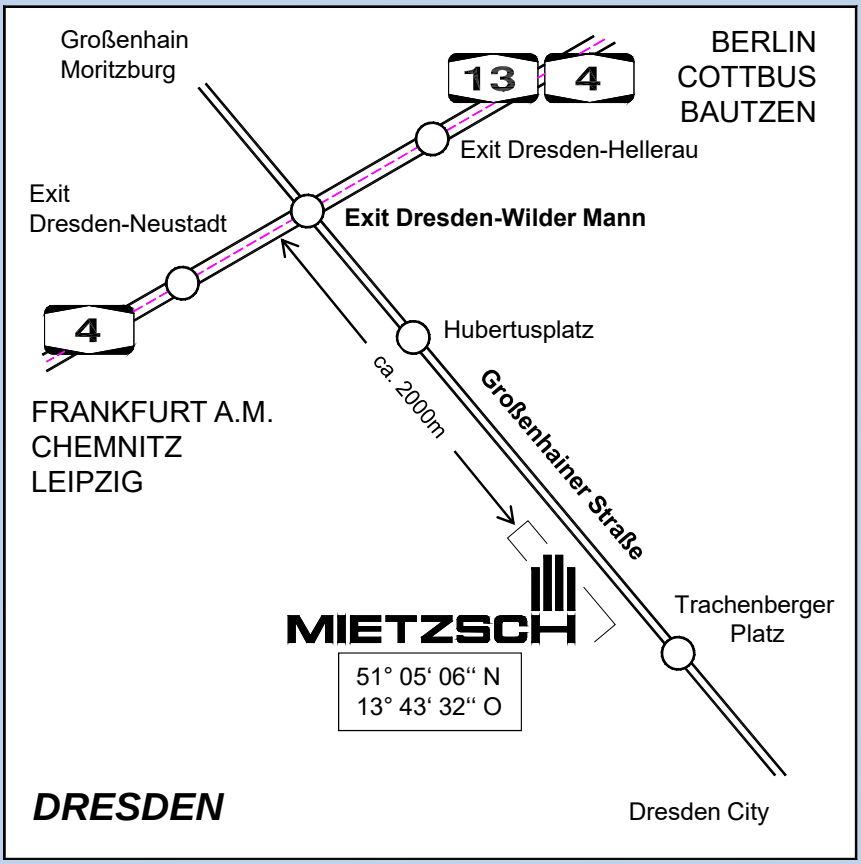

GmbH Lufttechnik Dresden

Großenhainer Straße 137
DE-01129 Dresden

Telefon:	+49 351 8433 0
FAX:	+49 351 8433 160
E-mail	mietzsch@mietzsch.de
Internet	http://www.mietzsch.de